PENZA AUDIO

PROFESSIONAL PA SPEAKERS

PENZA

PZ 18P-300A SPEAKERS

Description-: PZ 18P-300A— PA Speaker Driver Overview This model is a professional-grade 18-inch speaker driver built for public address and sound reinforcement applications. Here's what makes it stand out.

Key Specification-:

- A 4″ voice coil is a common configuration for high-power woofers /subwoofers.
- A 4 voice coil is fairly common for high-power / high excursion drivers — hel--ps with heat dissipation and mechanical strength.
- its high efficiency and linearity make it ideal for professional audio systems requiring robust mid-bass performance.

Features-:

MODEL NO.	PZ 18P-300A
RATED POWER	1200 W
MAX POWER	2400 W
NOMINAL DIAMETER	18”
SENSITIVITY	96 DB
VOICE COIL DIAMETER	4”
MAGNET SIZE	220 MM
MAGNET TYPE	FERRITE
FREQUENCY RANGE	75Hz
WEIGHT	10.48 KG

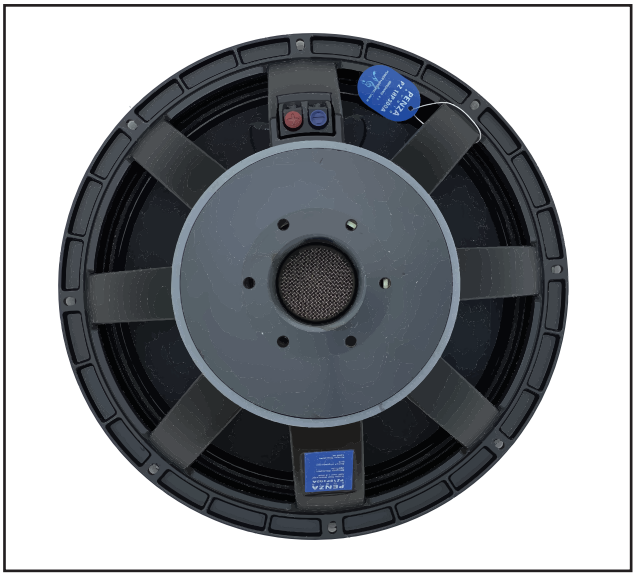

PZ 18P-300A